1.General

SL-CP71 series automatic transfer switch, is a integrating switch and logic control system, don't need additional controller, realize the automatic transfer switch in a mechanical and electrical integration feature. With a detecting voltage, frequency, communication interface, electrical and mechanical interlock function, which can be realized the automatic electric remote emergency manual control.
Operation is controlled by the logic control board and a variety of logic commands to manage the motor, gearbox operation to achieve, motor driven switch spring storage, instantaneous release of acceleration mechanism, fast switching circuit or circuit conversion, through a clear visible state to achieve safe isolation, greatly improving the electrical performance and mechanical properties.
It is Applied IEC60947-1 IEC60947-3 IEC60947-6-1.

2.Note

2.1 SL-CP71 series automatic transfer switch integrated design as a metal shell, compact but robust. Control part is a metal shell, switch shell components made of glass fiber unsaturated polyester resin manufacturing, has a strong dielectric properties, p-rotection and reliable safety of operation.

2.2 The switch is suitable for automatic conversion between main power supply and backup power supply system or automatic conversion of two load equipment safety isolation.

2.3 The switch is beautiful design, novel, simple, small size but functional, it is a ideal choice for different occasions.

3.Characteristics

- SL-CP71 series automatic transfer switch is mainly used in AC 50Hz, rated voltage 380V,DC rated voltage 220V, rated current 16A to 3200A power distribution or motor network. The main – backup power supply or inter-power supply shift loading with power line and generator, can be used for the isolation of the circuit and the circuit without frequent connection.

- Products are widely used in fire fighting, hospitals, banks, high-rise buildings, and other important distribution systems and automation systems which don't allowed to off the power supply transmission.

4.Specifications

Rated current Ith		20A	40A	60A	80A	100A	125A	160A	250A	400A	630A	800A	1000A	1250A	1600A
Rated isolation voltage Ui		750V								1000V					
Rated impulse withstand voltage Uimp		8kV								12kV					
Rated working voltage Ue		440V AC													
Rated working current Ie	AC-31A	20	40	63	80	100	125	160	250	400	630	800	1000	1250	1600
	AC-35A	20	40	63	80	100	125	160	250	400	630	800	1000	1000	1600
	AC-33A	20	40	63	80	100	125	160	250	400	400	630	800	800	1000
Rated connection capacity		10Ie													
Rated breaking capacity		8Ie													
Rated limited short-circuit current Is		50kA								70kA				100kA	120kA
Rated short-time withstand current Is		7kA						9kA		13kA		26kA		50kA	
Conversion Time Ⅰ-Ⅱ or Ⅱ-Ⅰ		0.45s								0.6s		1.2s			
Control voltage		24V DC; 48V DC; 110V DC ; 220V AC													
Motor energy consumption															
Rated power	start	300W						325W		355W		400W	440W		
	working	55W						62W		74W		90W	98W		
Weight（kg）4 pole		7.0	7.2	7.2	7.2	7.5	7.5	8.8	9.0	16.5	17	32	36	40	43

5.Dimensions

SL-CP71-100 series ATS

Mounting and dimension drawing（20～100A）

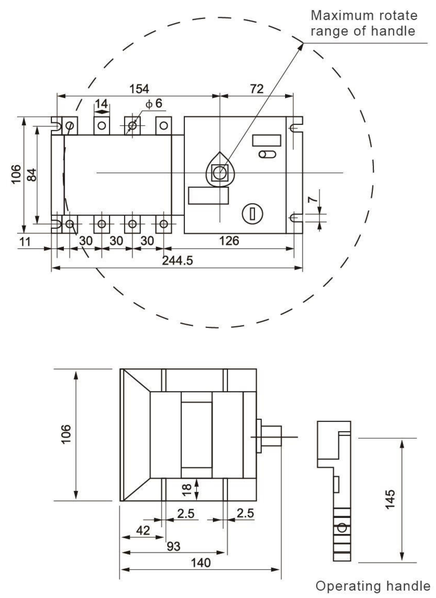

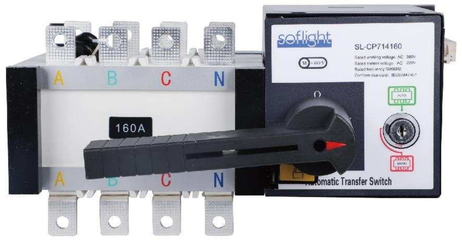

SL-CP71-160~3200 series ATS

Outline mounting dimension (160~1600A)

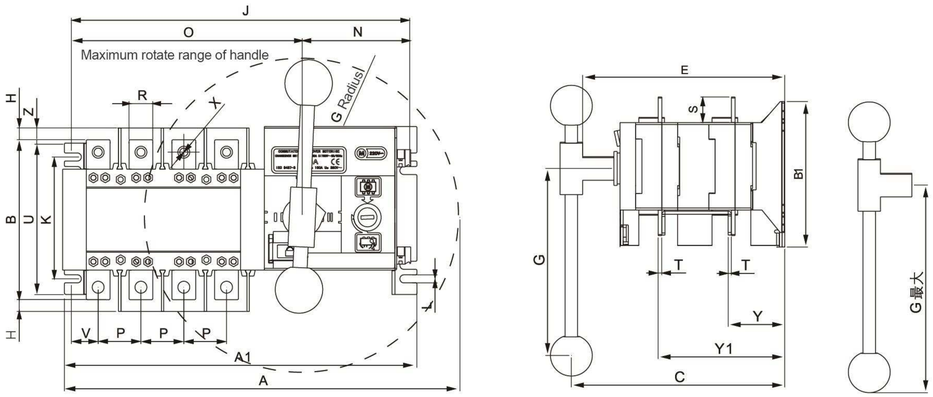

1000A～1600A mounting dimension chart

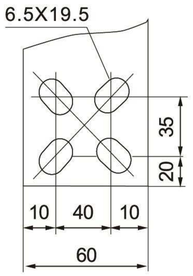

800A 1000A

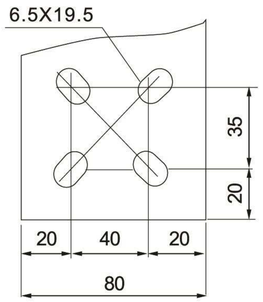

1250A 1600A

20A~1600A mounting dimension

Specifications	Total dimensions								Switch installation										Terminal				
	A	A1	B	B1	C	E	G	H	J	K	L	N	O	P	R	S	T	U	V	φX	Y	Y1	Z
20A	279	243	106	103	169	145	115	19	229	85	7	76	153	30	14	18	2.5	103	20	6	41	94	3
40A	279	243	106	103	169	145	115	19	229	85	7	76	153	30	14	18	2.5	103	20	6	41	94	3
63A	279	243	106	103	169	145	115	19	229	85	7	76	153	30	14	18	2.5	103	12	6	41	94	3
80A	279	243	106	103	169	145	115	19	229	85	7	76	153	30	14	18	2.5	103	12	6	41	94	3
100A	279	243	106	103	169	145	115	19	229	85	7	76	153	30	14	18	2.5	103	12	6	41	94	3
125A	322	300	135	128	230	189	115	10	284	102	7	91	190	36	20	25	3.5	127	18	9	55	125	4
160A	322	300	135	128	230	189	115	10	284	102	7	91	190	36	20	25	3.5	127	18	9	55	125	4
250A	406	362	163	142	230	189	143	4	343	80/102	7	91	252	36	25	30	3.5	142	15	11	57	125	11
400A	552	433	234	222	284	273	189	14	416	180	9	93	323	50	40	38	5	222	18	13	83	193	19
630A	552	433	250	222	284	273	189	14	416	99/180	9	93	323	65	40	45	6	222	18	13	83	193	19
800A	760	633	328	250	363	350	443	28	613	220	11	87	526	65	60	64	8	250	31	13	109	254	54
1000A	760	633	328	250	363	350	443	28	613	220	11	87	526	120	60	64	8	250	31	13	109	254	54
1250A	760	633	336	250	363	350	443	28	613	220	11	87	526	120	80	68	8	250	21	13	110	254	54
1600A	760	633	336	250	363	350	443	28	613	220	11	87	526	120	80	68	10	250	21	13	110	254	54

2000A~3200A mounting dimension drawing

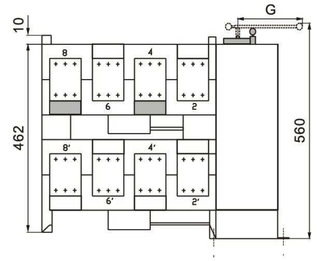

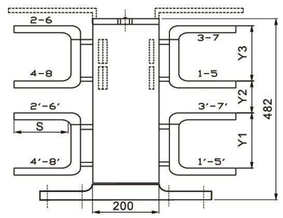

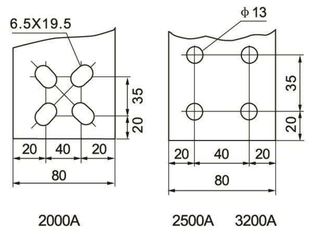

2000A 2500A 3200A

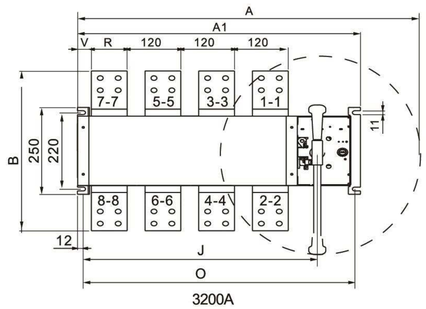

3200A

2000A ～ 3200A mounting dimension

Specifications	A	A1	B	C	G	J	O	R	S	T	V	Y1	Y2	Y3
2000A	800	630	422	542	447	524	610	80	81	10	30	116	118	116
2500A	800	630	432	542	447	524	610	80	81	15	30	121	113	121
3200A	800	630	442	542	447	524	610	80	81	20	30	126	108	126