1.Function

- Provides protection against earth fault/leakage current and unction of isolation
- High short-circuit current withstand capacity
- Applicable to terminal and pin/U type busbar connection
- On off display function of contact position
- Fire resistant plastic parts endures abnormal heating and strong impact
- Automatically disconnect the circuit when earth fault/leakage current occurs and exceeds the rated sensitivity

2.Description

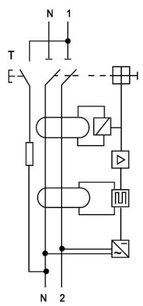

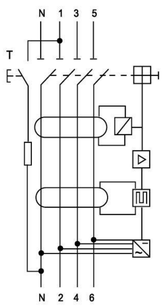

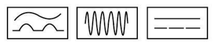

IEC62955
IEC/EN61008-1

ResidualCurrentCircuitBreaker(RCCB)provides:

- Protection of persons against electric shock by direct contact (30mA): electrical standard IEC 61008-1.
- OFF protection of the toggle ascertains disconnection of downstream part from power source.
- A test button (on the front face above the toggle) allows to check healthy functioning of the RCCB.

3.Test

1. A test for the effectiveness of the RCCB in the protected installation should be carried out, periodically, as detailed in applicable maintenance standards.

2. To test the operation of the RCCB after installation:

- RCCB must be in ON position and energised.
- Press the test button on the front of the device.
- The RCCB should trip immediately.

Failure to do so indicates either no supply to the RCCB or a faulty device.

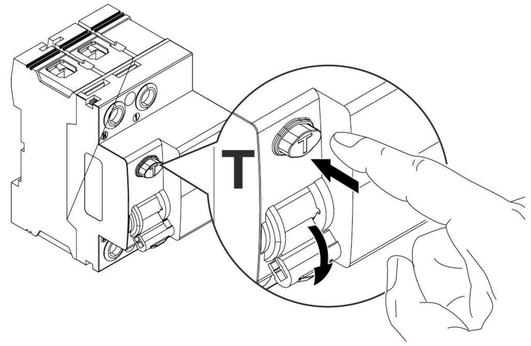

4.Specifications

Type	Standard		IEC/EN 61008-1
Electrical features	Leakage type		Electromagnetic type
	Rated current In	A	25, 32, 40, 63, 80, 100
	Type (wave form of the earth leakage sensed)		B, A+DC 6mA
	Poles	P	2,4
	Rated voltage Ue	V	240/415
	Insulation voltage Ui	V	500
	Rated frequency	Hz	50/60
	Rated breaking capacity Inc=IΔc	A	6000
	SCPD fuse	A	6000
	Rated impulse withstand voltage (1.2/50) Uimp	V	6000
	Dielectric test voltage at ind. Freq. for 1min	kV	2.5
	Rated sensitivity IΔn	A	0.006, 0.01, 0.03, 0.1, 0.3
	Rated residual making and breaking capacity IΔm	A	500(In≤40A);630(In＞40A)
	Pollution degree		2
Mechanical features	Electrical life	t	4000
	Mechanical life	t	8000
	Protection degree		IP20
	Ambient temperature(with daily average≤35℃)	℃	-25~+40
	Storage temperature	℃	-25~+70
Installation	Terminal connection type		Cable/Pin-type busbar/U-type bar
	Terminal size top/bottom for cable	mm²	35
		AWG	18/1
	Terminal size top/bottom for busbar	mm²	35
		AWG	18/1
	Tightening torque	N*m	2.5
		In-lbs	22
	Mounting		On DIN rail EN 60715(35mm)by means of fast clip device
	Connection		From top and bottom

M

5.Conductor

Copper cross-section(mm^2)	Rated current In(A)
4	20<In≤25
6	25<In≤32
10	32<In≤50
16	50<In≤63
25	63<In≤80
35	80<In≤100

6.Types

Both RCCBs and RCBOs are further divided into types depending on the operating function:

- **Type AC** : For which tripping is ensured for residual sinusoidal alternating currents, whether suddenly applied or slowly rising.
- **Type A** : For which tripping is ensured for residual sinusoidal alternating currents and residual pulsating direct currents, whether suddenly applied or slowly rising.
- **Type S** : For selectivity, with time delay.
- **Type AS** : For selectivity, with time delay.

7.Dimensions

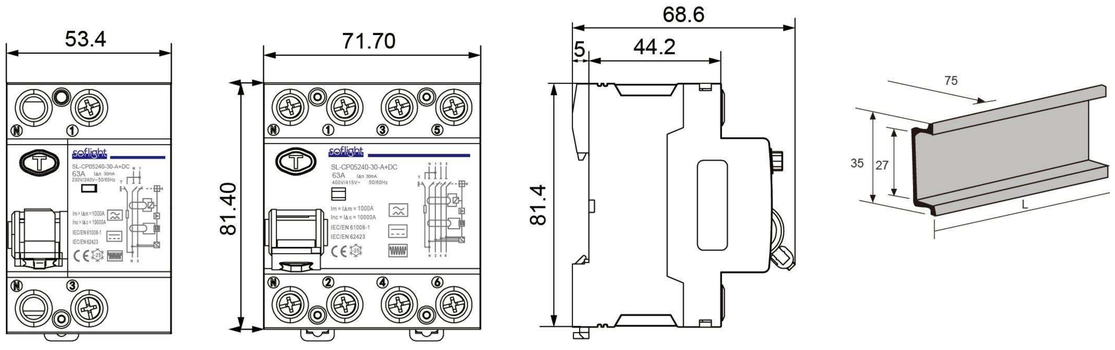

8.Order Note

Following items should be marked when ordering	Ordering sample
Product name, model & frame level Poles Tripping characteristic and rated current Quantity	To order SL-CP05240-30-A+DC residual current circuit breaker, frame level 100A, 2P, rated current 25A, rated residual current is 30mA, quantity 100 pieces, should be marked: SL-CP05240-30-A+DC/2P 25A 30mA, B type, 100PCS.